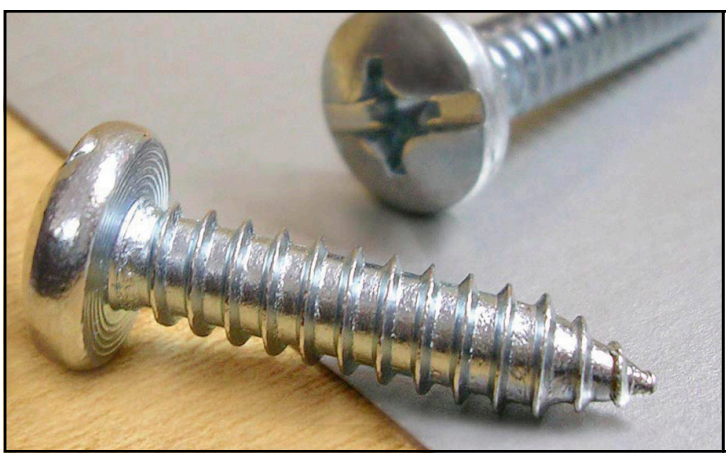

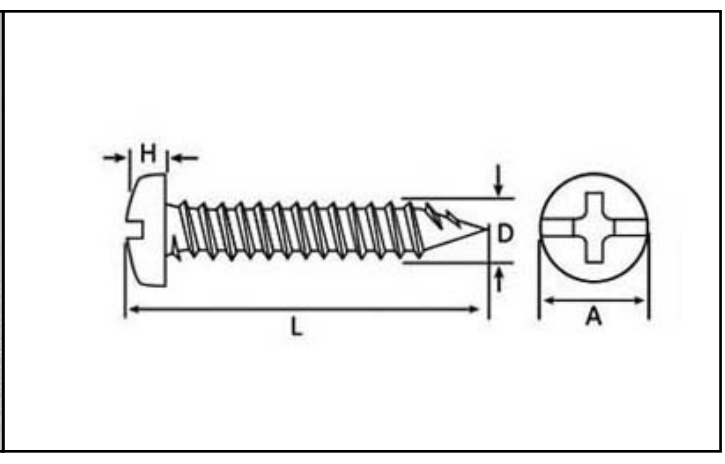

ROSCALATA CABEZA PAN RANURA COMBINADA

Código	Diámetro	Largo "L", pulg	Envase		Diámetro "A" Cabeza, mm	Altura "H" Cabeza, mm	Diámetro Perfor Piloto (mm)	Rango a Roscar (mm)	Torque Instalación (Nm)
03RLBC	#4	1/4	100	U	5,3	1,9	2.3 - 2.5	0.4 - 1.5	1,46
04RLBC		3/8							
05RLBC		1/2							
06RLBC		5/8							
07RLBC		3/4							
58RLBC		1''							
08RLBC	#6	1/4	100	U	6,6	2,3	2.7 - 3.0	0.4 - 1.9	2,7
09RLBC		3/8							
10RLBC		1/2							
11RLBC		5/8							
12RLBC		3/4							
13RLBC		1"							
14RLBC		1 1/4							
46RLBC		1 1/2							
47RLBC		2"							
48RLBC		2 1/2							
49RLBC		3"							
15RLBC	#8	1/4	100	U	7,9	2,8	3.2 - 3.5	0.6 - 1.9	4,4
17RLBC		3/8							
18RLBC		1/2							
19RLBC		5/8							
20RLBC		3/4							
21RLBC		7/8							
22RLBC		1"							
23RLBC		1 1/4							
24RLBC		1 1/2							
42RLBC		2"							
50RLBC		2 1/2							
51RLBC		3"							
25RLBC	#10	1/2	100	U	9,2	3,2	3.7 - 4.0	0.5 - 3.2	6,32
26RLBC		5/8							
27RLBC		3/4							
28RLBC		1"							
29RLBC		1 1/4							
30RLBC		1 1/2							
43RLBC		2"							
52RLBC		2 1/2							
53RLBC		3"							
31RLBC	#12	1/2	100	U	10,5	3,7	4.3 - 4.8	0.6 - 3.2	9,94
32RLBC		5/8							
33RLBC		3/4							
34RLBC		1"							
35RLBC		1 1/4							
36RLBC		1 1/2							
44RLBC		2"							
54RLBC		2 1/2							
55RLBC		3"							
37RLBC	1/4	1/2	100	U	12,2	4,3	5.0 - 5.5	0.8 - 4.7	16
38RLBC		3/4							
39RLBC		1"							
40RLBC		1 1/4							
41RLBC		1 1/2							
45RLBC		2"							
56RLBC		2 1/2							
57RLBC		3"							
Zincado Ne-									
N03RLBC	#4	1/4	100	U	5,3	1,9	2.3 - 2.5	0.4 - 1.5	1,46
N04RLBC		3/8							
N05RLBC		1/2							
N08RLBC	#6	1/4	100	U	6,6	2,3	2.7 - 3.0	0.4 - 1.9	2,7
N09RLBC		3/8							
N10RLBC		1/2							
N11RLBC		5/8							
N12RLBC		3/4							
N13RLBC		1"							
N14RLBC		1 1/4							
N46RLBC		1 1/2							
N17RLBC	#8	3/8	100	U	7,9	2,8	3.2 - 3.5	0.6 - 1.9	4,4
N18RLBC		1/2							
N19RLBC		5/8							
N20RLBC		3/4							
N22RLBC		1"							
N23RLBC		1 1/4							
N24RLBC		1 1/2							
N42RLBC		2"							
N51RLBC		3"							
N25RLBC	#10	1/2	100	U	9,2	3,2	3.7 - 4.0	0.5 - 3.2	6,32
N26RLBC		5/8							
N27RLBC		3/4							
N28RLBC		1"							
N29RLBC		1 1/4							
N30RLBC		1 1/2							
N43RLBC		2"							
N52RLBC		2,5							
N53RLBC		3"							